FERROTEC CONFIDENTIAL

ROHS COMPLIANCE

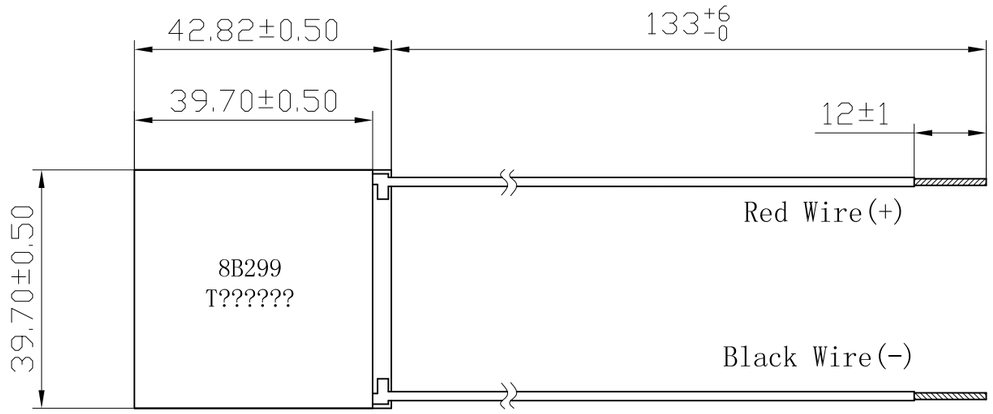

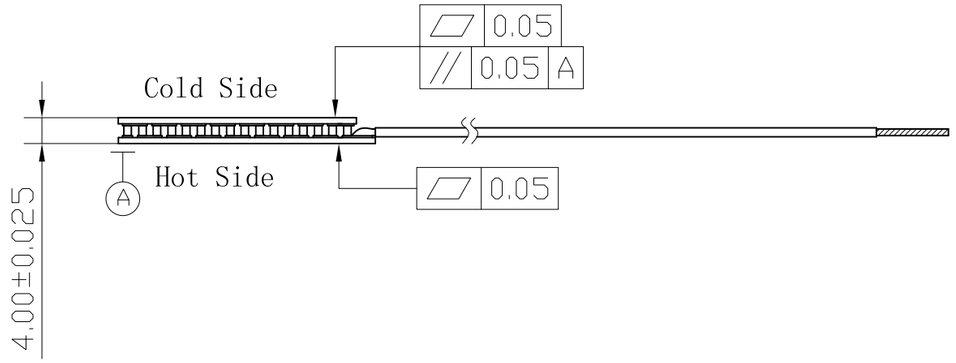

1)The resistance of the module shall be within 1.93 to 2.357 ohms at an ambient temperature of 25 degrees Celsius.
2)Material of lead wires: #20 AWG Type-E Teflon MIL-W-16878E/4.
3)The end of the lead wires is pre-tinned.
4)Lot Number and Part Number shall be stamped on the cold side with black color.
5) Max process temperature 200℃。

Item	Value	Test Conditions
Imax	6.0A	Qc=0, DT=DTmax, Th=50℃
Vmax	18.2V	Qc=0, I=Imax, Th=50℃
DTmax	83℃	Qc=0, I=Imax, Th=50℃
Qcmax	57W	I=Imax, DT=0, Th=50℃

FerroTec

General Dimension Tolerance			
Process / Size Range	Cutting Common	Cutting Special	Forging Common
less than 6	±0.1	±0.15	±0.5
6 up to 30	±0.2		
30 up to 120	±0.3	±0.2	±0.7
120 up to 315	±0.5	±0.25	±1.0
315 up to 1000	±0.8	±0.4	±1.5
Angel	±5°	±1°	±5°

PLs	Date	Summary Of Modification	By

Designed	Mei Yang	14/6/23	Finished Mark
Checked	Yongqin Wu	14/6/23	Material
FTH Approved			Finish
FT Approved			Raw Material Size
FTU Approved			Raw Material Weight

Title: 72005/128/060B			Proj. 3 Angle
Drawing Number: T1406-0500E			1/1
P/N: 8B299	Scale: Do Not Scale		Rev. Z